0301 - 'Charles' Washbasin (Top View)

Single Hole or 8" C.T.C.

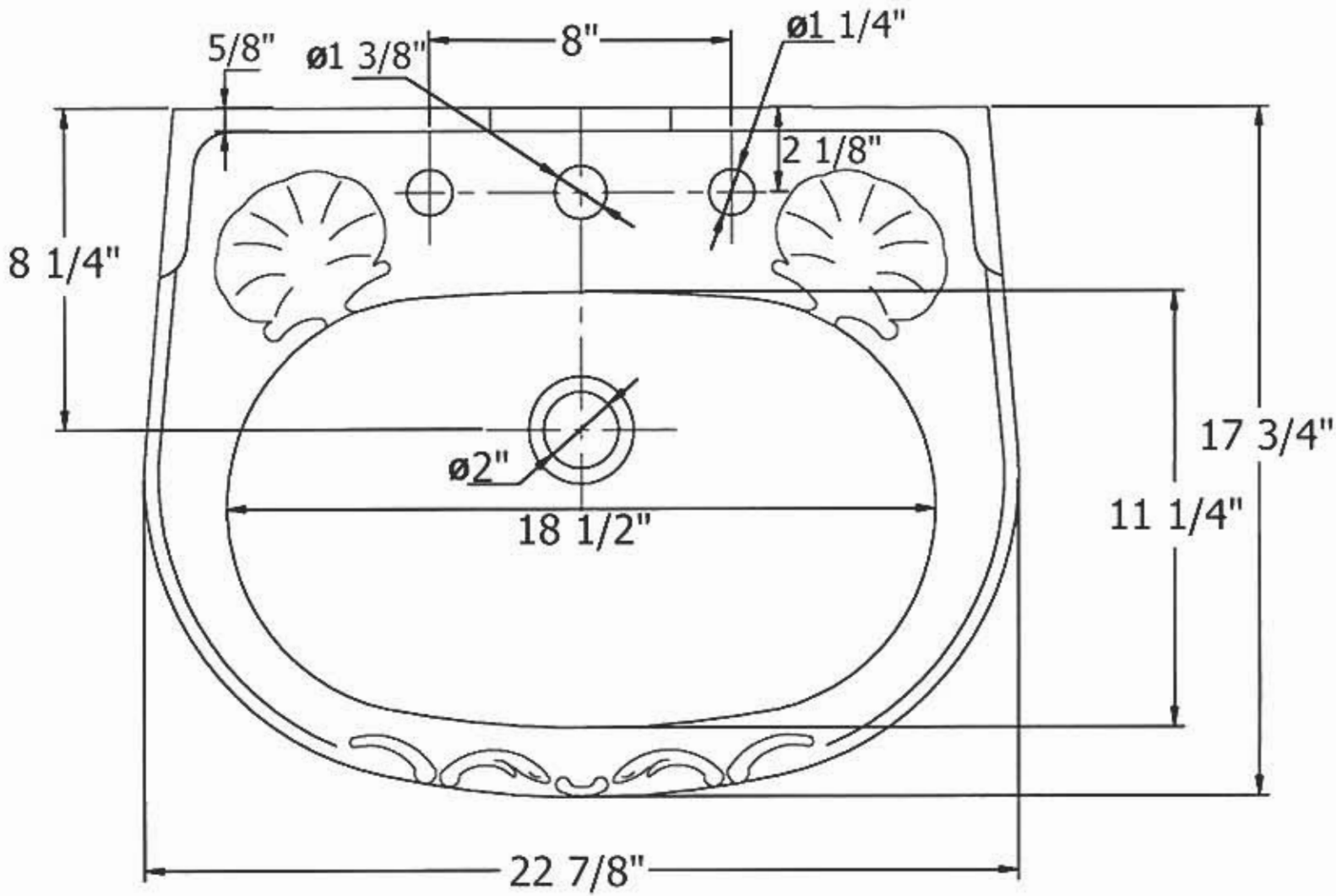

Copyright©2003 Herbeau Creations. All Rights Reserved. All Products and specifications are subject to change without notice.
Herbeau Creations is not responsible for typographical and/or dimensional errors. Typographical errors are subject to correction.